MULTILINE®
bright with light

Edge 55 S Direct - MPO - HO 150mA - ANO
07.74010593-0001

Fixture details

Mounting	Ceiling recessed
Light emission	Direct
Fitting cover	micro prismatic diffuser
Protection rate	IP 20
Housing	Aluminium
Finish	anodized finish
Certificates	CE, ISO 9001

Electric details

Protection class	I
Supply	230V
Control gear box	Current driver

Lamp details

Lamptype	LED 3000K
Wattage	3,2W
Gross luminous flux	5715
Luminaire power	31,6W
Number	9
Lifetime LED module	L80/B10 > 102000h
Color tolerance	MacAdam 3
CRI	>80

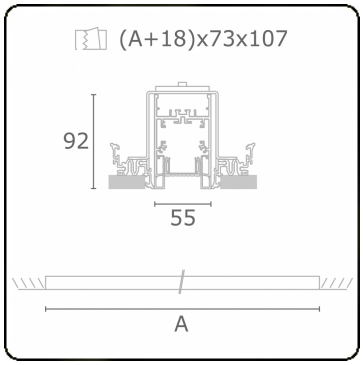

Photometric details

UGR	>19
CIE Fluxcode	58 89 98 100 50

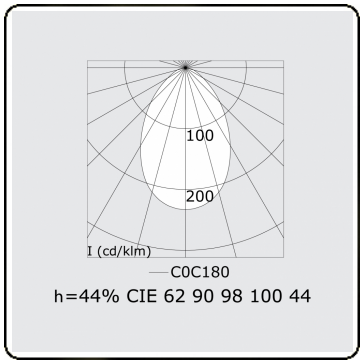

Dimensions

A	2536 mm

Remarks
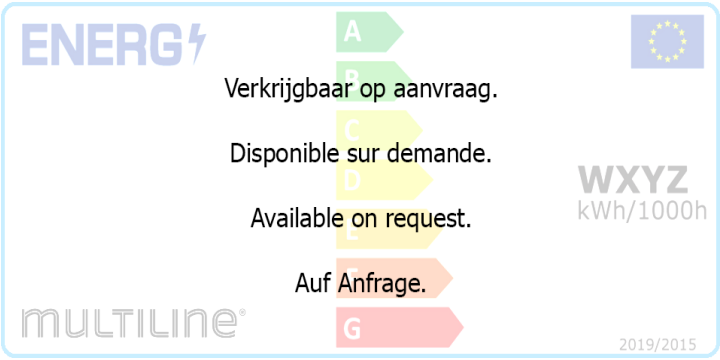
Recessed luminaire (trimless) - Direct - HO 150mA - MPO - ANO