MULTILINE®
bright with light

Rekta 40x70 Direct - VDT - LO 400mA - RAL
07.28854184-9999

Fixture details

Mounting	Ceiling recessed
Light emission	Direct
Fitting cover	Louvre optic - black matt
Protection rate	IP 20
Housing	Aluminium
Finish	RAL colour at your choice
Certificates	CE, ISO 9001

Electric details

Protection class	I
Supply	230V
Control gear box	Current driver DALI/TD

Lamp details

Lamptype	LED 4000K
Wattage	4,4W
Gross luminous flux	6920
Luminaire power	39,1W
Number	8
Lifetime LED module	L80/B10 > 72000h
Color tolerance	MacAdam 3
CRI	>80

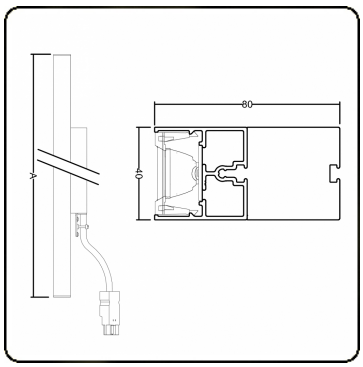

Photometric details

UGR	<19
CIE Fluxcode	98 100 100 99 84

Dimensions

A	2250 mm

Remarks
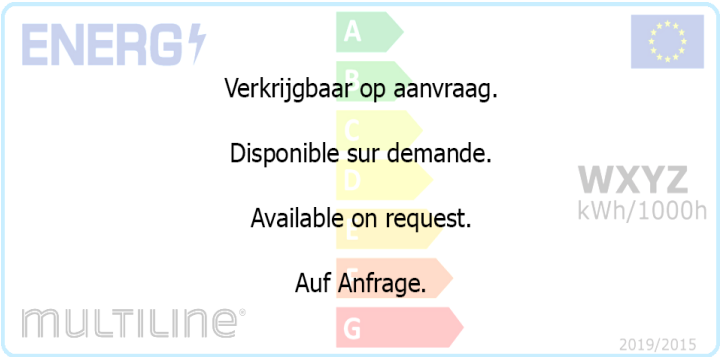
Ceiling luminaire - Direct - LO 400mA - VDT louvre - RAL